QUICKCROP

Cascade Planter Assembly Instructions

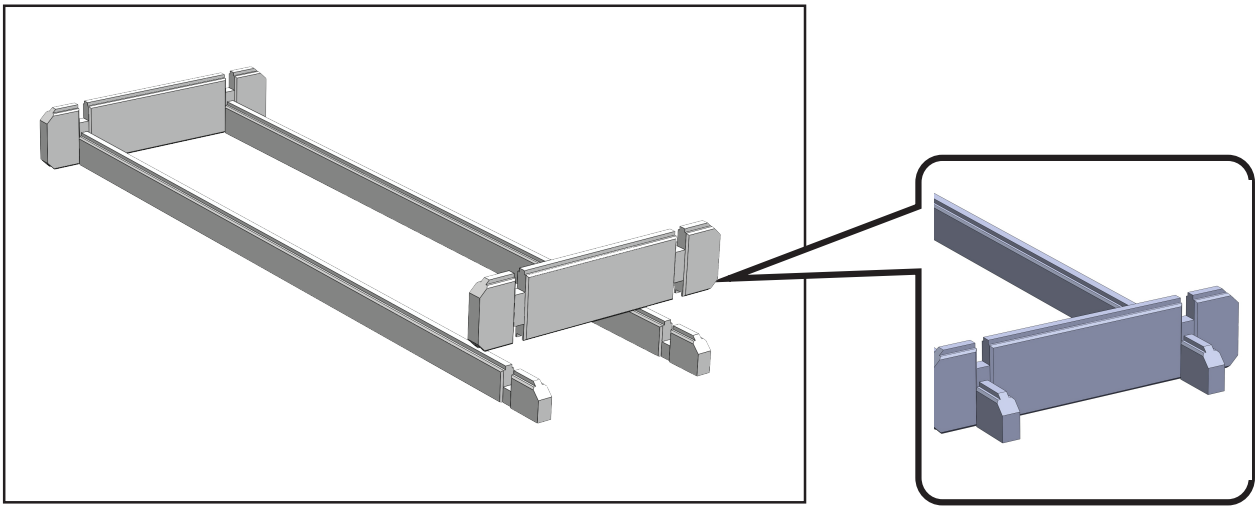

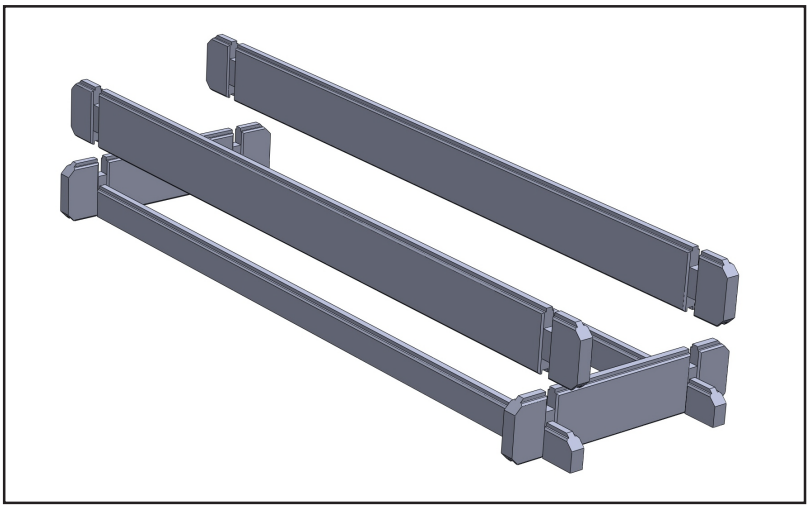

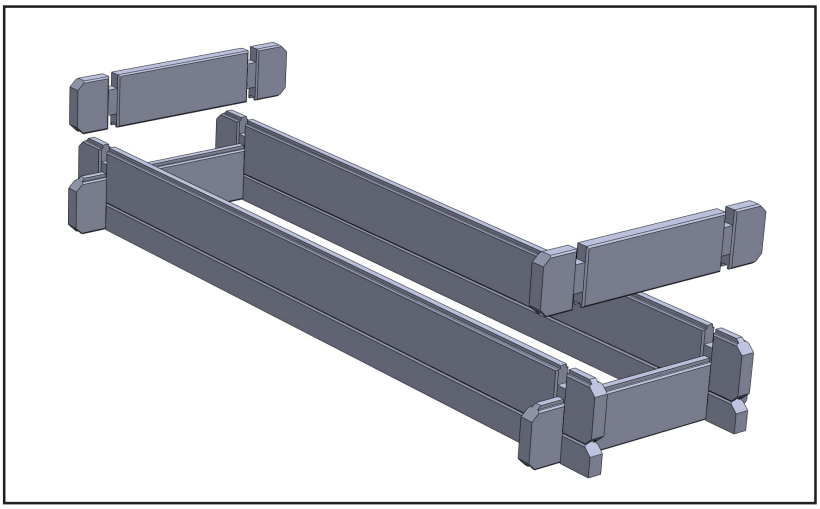

QUICKCROP
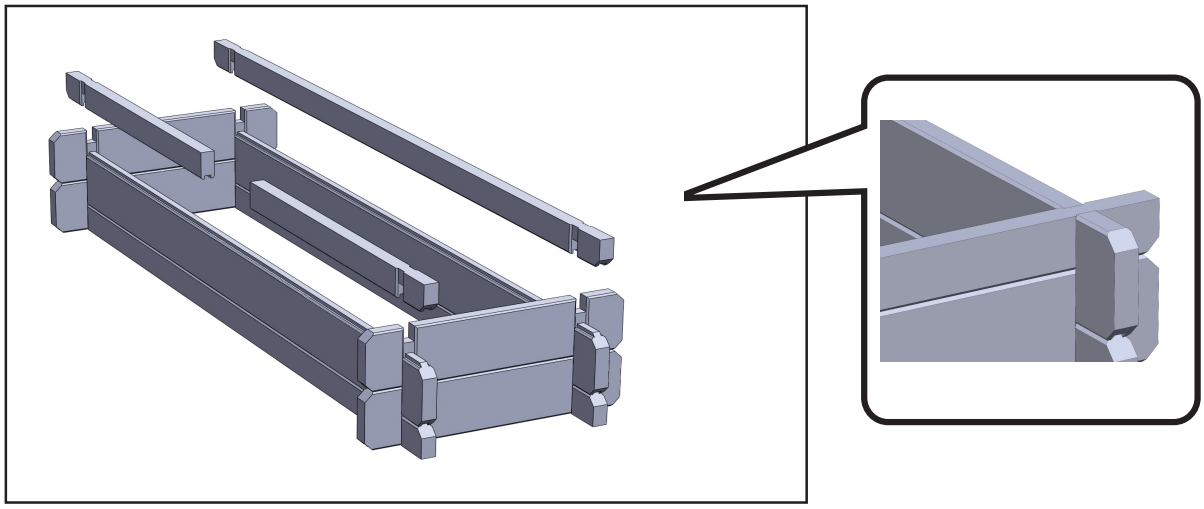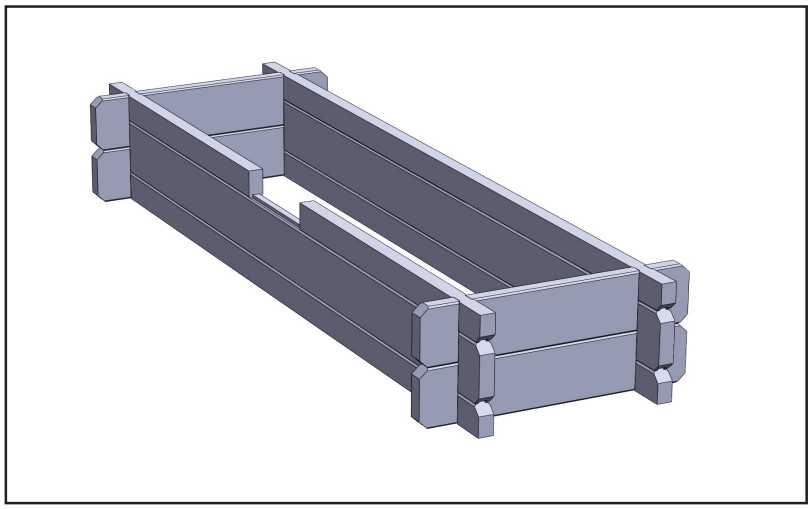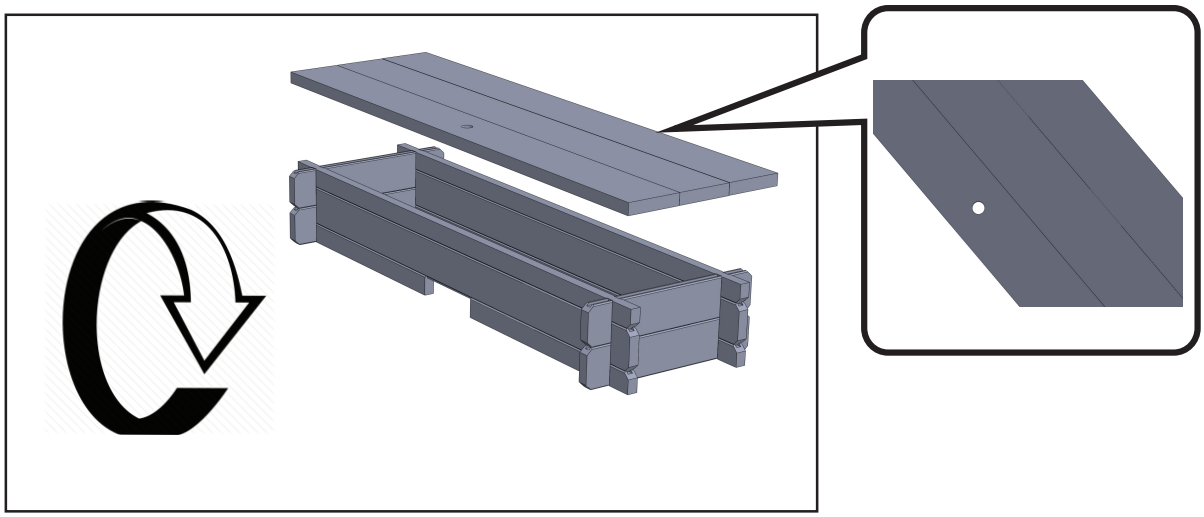
Cascade Planter Assembly Instructions